Electrostrictive Polymer Artificial Muscle for Biologically-inspired Robots

Roy Kornbluh, Ron Pelrine, and S. Venkat Shastri
Stanford Research Institute

This presentation describes the development of a new class of actuators for robotic, teleoperator and unmanned vehicle applications. The actuators are based on the electrostriction (deformation of a dielectric in an electric field) of polymer materials. The energy density, force per unit cross-sectional area, stroke per unit length and speed of response of this class of actuator is, in many respects, similar to biological muscle. Unlike other polymer-based "artificial muscle" technologies based on the swelling of gels or conductive polymers, electrostrictive polymer artificial muscle (EPAM) actuators are fast, easily controllable and efficient. By analogy to biological muscle, we would expect that this type of actuator is well suited for biologically inspired robotic and teleoperated applications. In contrast, other actuation technologies, such as electric motors and piezoelectric devices, have significant differences from biological muscle that make such applications difficult. Examples of possible applications for EPAM actuators include moving the legs of small insect-like walking robots, bending of highly articulated snake-like manipulators and general purpose lightweight rotary motors. A proof-of-concept EPAM spherical joint for a snake-like manipulator and a simple EPAM rotary motor were demonstrated. The initial performance of these actuators is encouraging. We believe that we can fabricate a low-cost rotary motor with greater specific power and specific torque than the best electromagnetic and piezoelectric devices.

Electrostrictive Polymer Artificial Muscle Actuators for Biologically-inspired Robots

1st NASA/JPL Workshop on Biomorphic Explorers

August 1998

Roy Kornbluh, Ron Pelrine, Venkat Shastri

SRI International

Motivation for Artificial Muscle Actuators

- Natural muscle used by creatures from elephants to insects
- Natural muscle has outstanding overall performance & versatility
- No existing actuator technology has such good overall performance and scale invariance
- An actuation technology with muscle-like performance/versatility would find wide applications in biomorphic robots

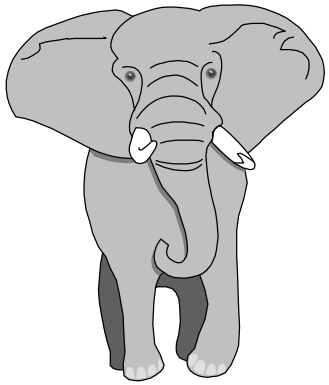

Why Electrostrictive Polymer Artificial Muscle for Biomorphic Explorers?

- Muscle-like performance suggests that biomimetic devices should be feasible
- Compact and lightweight - high energy and power density
- Energy efficient
- Rapid speed of response
- Easily controllable (electrically powered)
- Many configurations possible - rolls, tubes, unimorphs, bimorphs, rotary and linear motors
- Scale-invariant performance
  - mini and micro robots feasible without sacrificing energy efficiency
  - scale advantages over electromagnetic motors
- Environmentally tolerant
  - explorers must be able to operate in ambient extremes
- Large displacement can simplify or eliminate linkage design

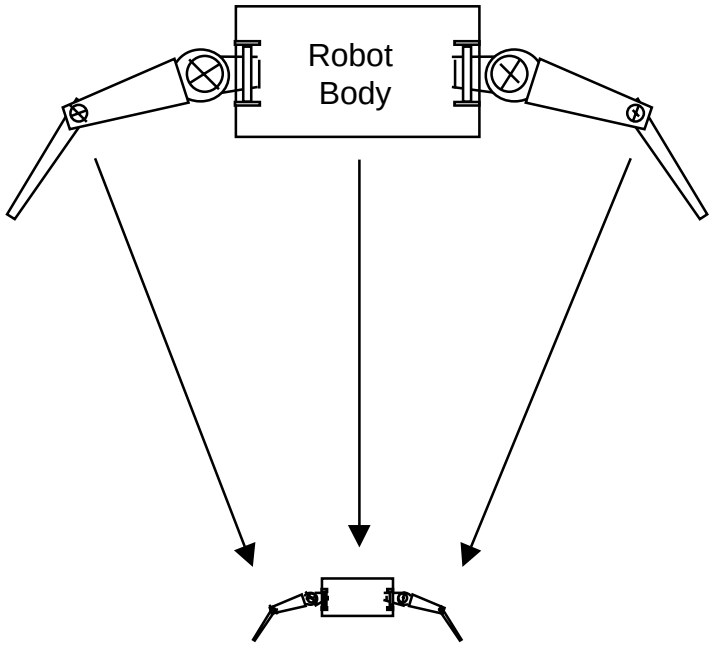

Scale-invariant Actuator Performance

Principle of Operation of Electrostrictive Polymer Actuators

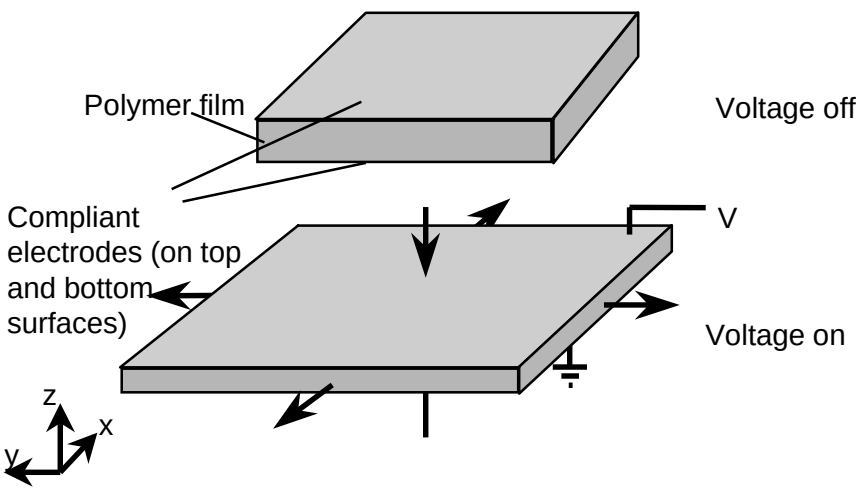

Basic functional element

Electrical energy density in the polymer is:

$$U = \varepsilon_r \, \varepsilon_o \, E^2$$

According to our experiments the permittivity is not a function of applied electric field or strain:

$$\mathrm{d}\,(\varepsilon_r \, \varepsilon_o)/\mathrm{d}E = 0, \ \mathrm{d}\,(\varepsilon_r \, \varepsilon_o)/\mathrm{d}z = 0$$

Therefore, by conservation of energy and principal of virtual work (ignoring viscoelastic and electrical losses), the stress generated within the polymer due to the applied field is:

$$p = 1/A \ \mathrm{d}u/\mathrm{d}z = \varepsilon_r \, \varepsilon_o \, E^2$$

Note that this model says that coulombic forces (Maxwell's stress) dominate the "electrostrictive" response

Features of Electrostrictive Polymer Muscle Actuation

- Effective actuation pressure, *p*, is enhanced compared to rigid electrode, air gap electrostatic actuators

Polymer dielectric constant typically 2.5 - 10 compared to air dielectric constant of 1

ELECTROSTRICTIVE POLYMER $p = \varepsilon_r \varepsilon_o E^2$

AIR-GAP ELECTROSTATIC $p = 0.5\ \varepsilon_r \varepsilon_o E^2$

loss of a factor of 2 due to constraint of stretching mode

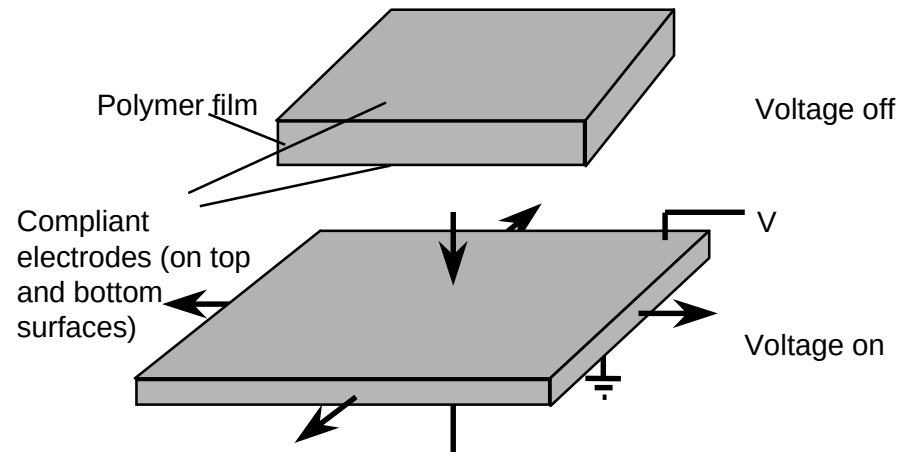

- Polymer dielectric
  - maintains electrode spacing
  - prevents introduction of dust or particulates between electrodes
- Range of polymers can be used
  - since electrostrictive effect is due to coulomb forces there is no need to rely on special chemistries or crystalline structures

Measured Performance of Various Polymers

Polymer (Specific type)	Energy Density (J/cm^3)	Pressure (MPa)	Strain (%)	Young's Modulus (MPa)	Maximum Electric Field (V/μm)
Polyurethane Deerfield PT6100S	0.10	1.9	11	17	160
Silicone Dow Corning Sylgard 186	0.034	0.21	32	0.7	144
Fluorosilicone Dow Corning 730	0.019	0.070	28	0.5	80
Fluoroelastomer LaurenL143HC	0.0080	0.20	8	2.5	32
Polybutadiene Aldrich PBD	0.011	0.19	12	1.7	76
Isoprene Natural Rubber Latex	0.0052	0.094	11	0.85	67

- Many commercially available polymers have demonstrated large electrostrictive responses

Strain Measurement Supports Analytical Model

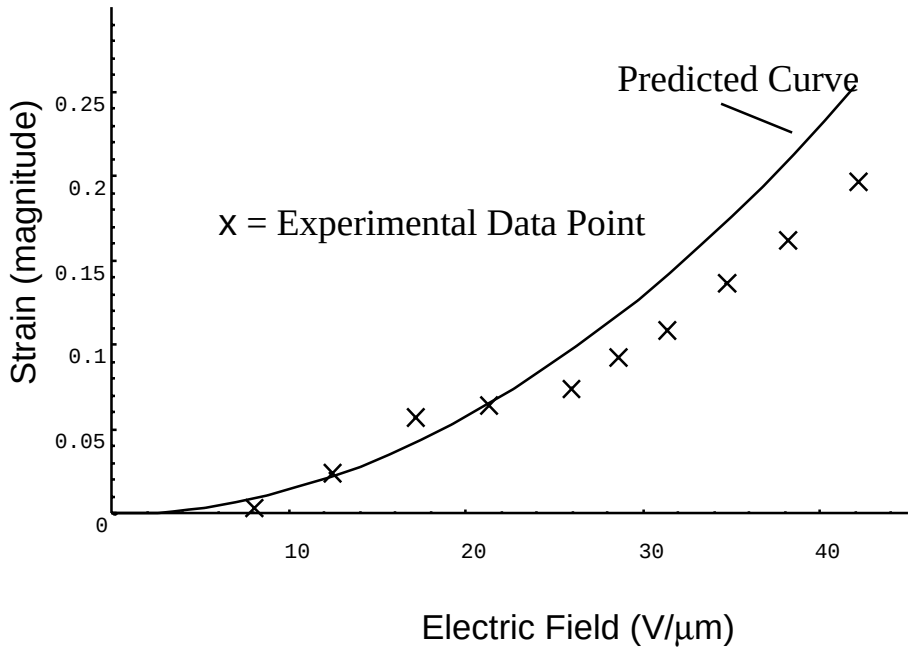

Comparison of theoretical prediction and measured response for the strain in thickness of a silicone film

Strain Measurement Approach

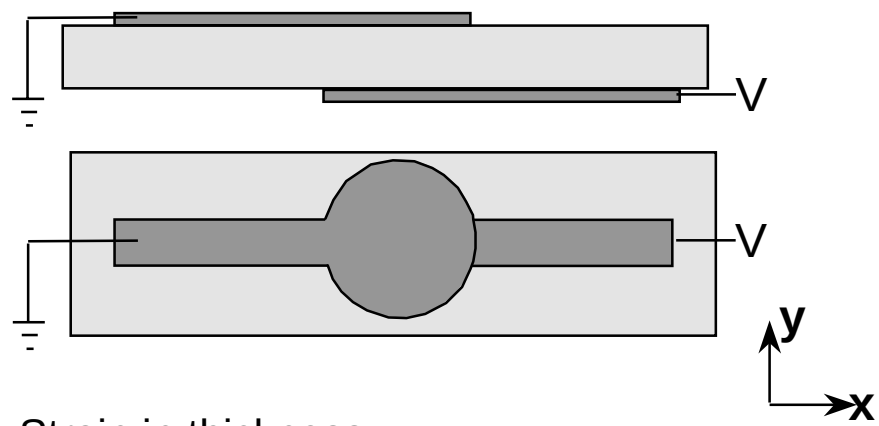

Strain in thickness:

Predicted: $s_z = - k_{constraint} p/Y$

Measured: s_x , s_y by looking at area change of circle above

Since the polymer is nearly incompressible:

$(1+s_x)\ (1+ s_y)\ (1+ s_z) = 1$

Demonstrated Actuator Configurations

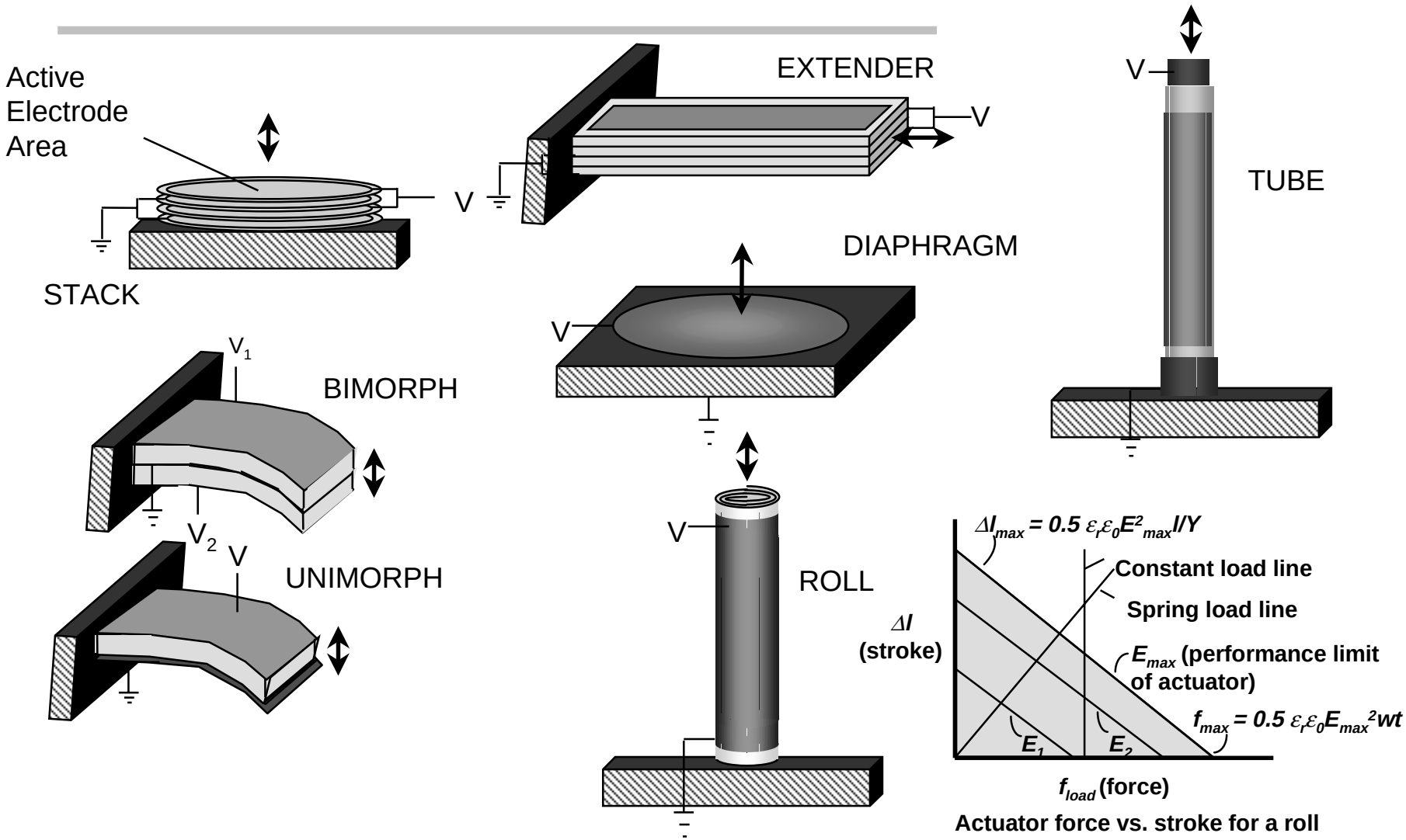

Actuator force vs. stroke for a roll

EP Fabrication

- Conventional polymer film fabrication techniques
  - solvent casting (simplest)
  - dip coating (complex shapes)
  - spin coating (highest quality; thinnest films)
- Electrodes
  - must be compliant and conductive; ideally patternable
  - various materials: colloidal carbon, carbon nano fibrils, gold, organic salts, etc.
  - conventional deposition techniques: spraying, casting with selective wetting, sputtering, spin coating
  - on-going area of research

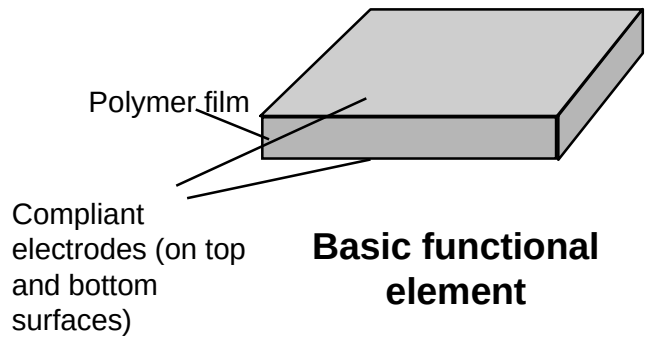

Basic functional element

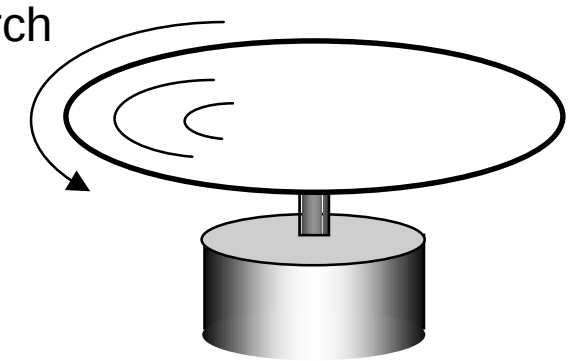

Spin coating has made micron thick films

Actuator Selection Issues

- Many parameters can form the basis of selection of actuator technologies
- “Fundamental” performance parameters concern how much input energy can be converted to mechanical work and power for a given size and mass of actuator
  - energy density (energy/volume) or specific energy (energy/mass)
  - energy efficiency (input/output)
  - speed of response
- Other application specific scale-invariant parameters include
  - strain
  - pressure
  - mechanical impedance (e.g. compliance)
- Still other parameters may be dependent on scale and concern practical implementation issues
  - operating voltage - what power sources are available
  - reliability
  - repeatability
  - environmental tolerance
- No single actuator technology is perfect for all applications, selection of actuator is usually a compromise

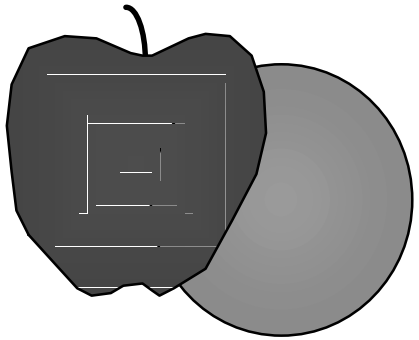

Actuator Comparisons

- Electrostrictive polymers have overall stress-strain performance, comparable to natural muscle
- Graph compares fast response actuation technologies (normalized for actuator size and mass):

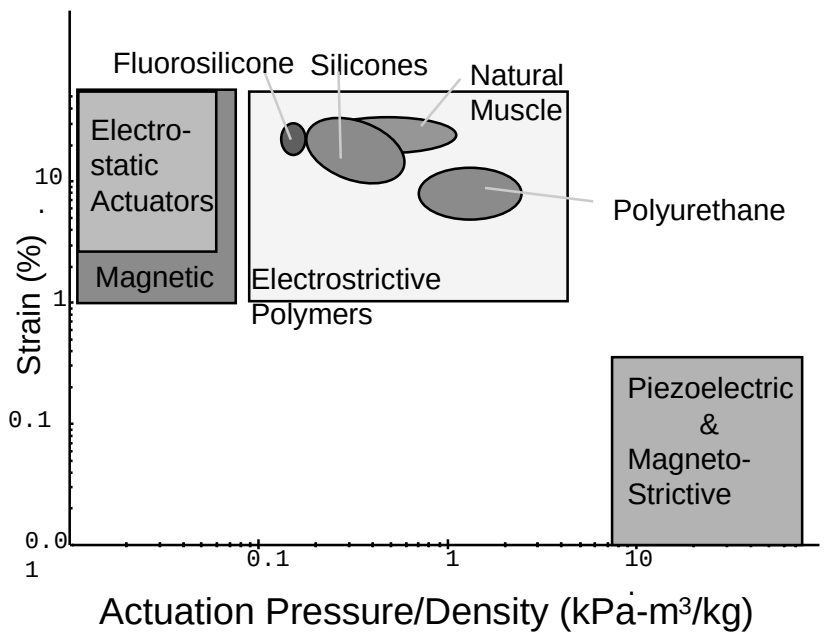

Actuator Type (specific example)	Max Strain (%)	Max Pressure (MPa)	Max Energy Density (J/cm^3)	Max Efficiency (%)	Specific Density	Relative Speed (full cycle)
Electrostrictive Polymer Artificial Muscle[1]						
(Silicone)	32	0.21	0.034	90	1	Fast
(Polyurethane)	11	1.9	0.10	80	1	Fast
Electrostatic devices (Integrated Force Array[2])	50	0.03	0.0015	>90	1	Fast
Electromagnetic (voice coil[3])	50	0.10	0.025	>90	8	Fast
Piezoelectric						
Ceramic (PZT[4])	0.2	110	0.10	>90	7.7	Fast
Polymer (PVDF[5])	0.1	4.8	0.0024	90	1.8	Fast
Shape memory alloy (TiNi[6])	>5	>200	>5	<10	6.5	Slow
Shape memory polymer (polyurethane[7])	100	4	2	<10	1	Slow
Thermal (expansion[8])	1	78	0.4	<10	2.7	Slow
Electrochemo-mechanical Conducting Polymer (Polyaniline[9])	10	450	23	<1%	~1	Slow
Mechanochemical Polymer/Gels (polyelectrolyte[10])	>40	0.3	0.06	30	~1	Slow
Magnetostrictive (Terfenol-D , Etrema Products[11])	0.2	70	0.025	60	9	Fast
Natural Muscle (human skeletal[12])	>40	0.35	0.07	>35	1	Med

Electrostrictive Polymer Actuation Applications: Projects and Potential

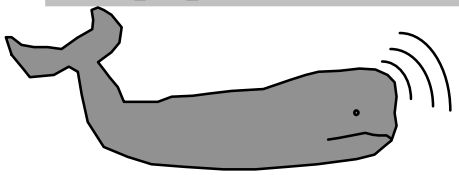

DARPA project investigating electrostrictive polymers for sonar actuators

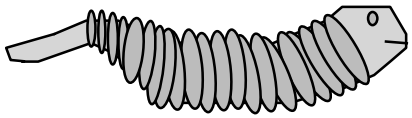

MITI (Japan) Micromachine Center project is investigating electrostrictive polymer artificial muscle for small robots for pipe inspection

DARPA project to demonstrate flapping wing propulsion using electrostrictive polymer actuators

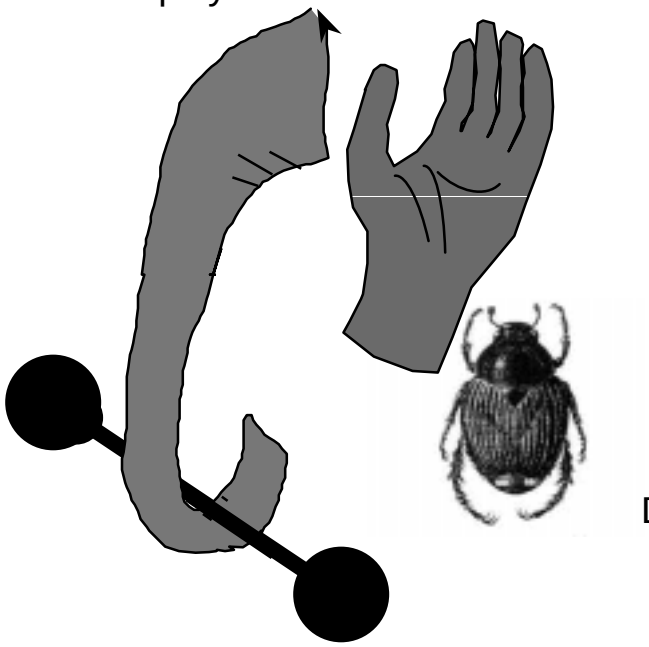

ONR sponsored development of improved actuators for robotic serpentine manipulators, legged locomotion and dexterous hands

DARPA sponsored development of a MEMS noise suppressor using an electrostrictive polymer loudspeaker

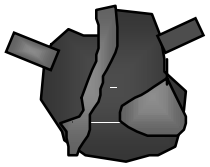

Many other applications and devices being investigated including:

pumps and valves

printing and display

Applications of Electrostrictive Polymer Artificial Muscle Actuators to Robots

ROLLED ACTUATORS ACT ANTAGONISTICALLY TO MOVE A SCALE MODEL OF A HUMAN ARM

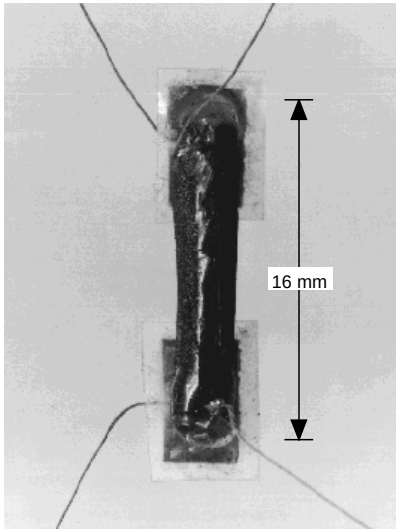

INCHWORM-LIKE ACTUATOR WITH ELECTROSTATIC CLAMPING FOR PROPULSION THROUGH SMALL PIPES

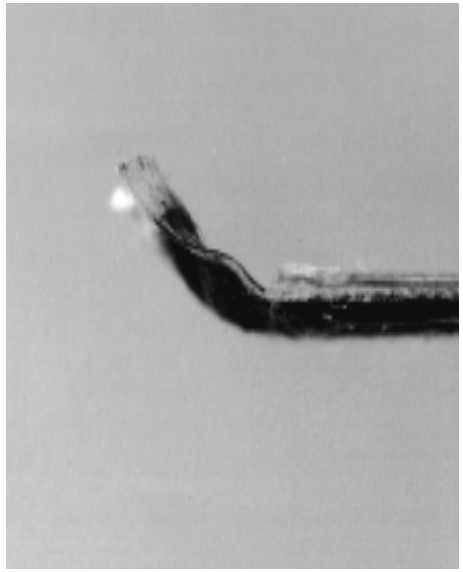

BIMORPH ACTUATOR CAN FUNCTION AS AN INSECT-LIKE LEG OR WING

Modular Spherical Joint Actuator for a Serpentine Manipulator

ACTUATOR/LINK DESIGN

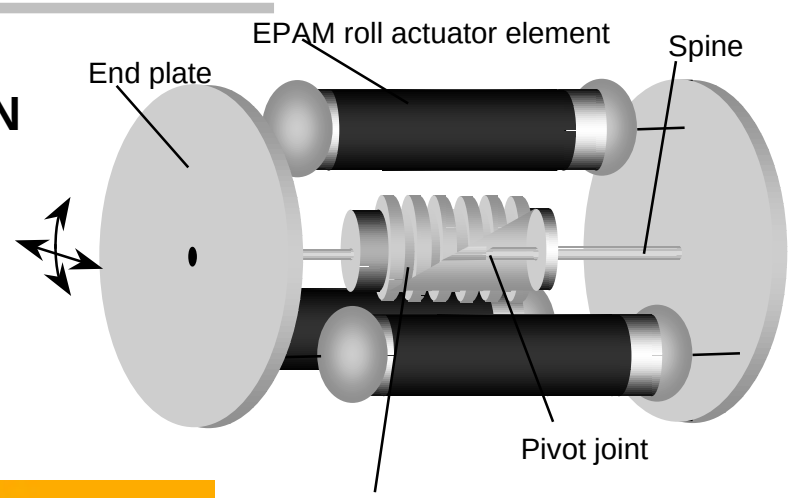

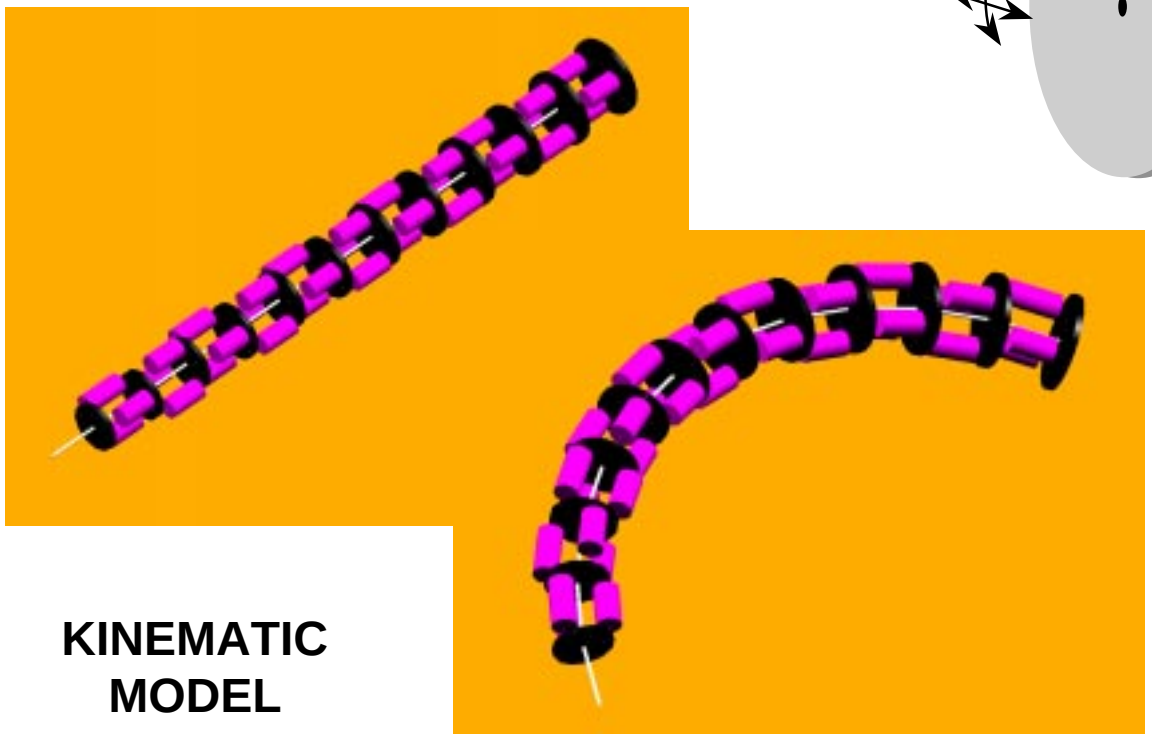

KINEMATIC MODEL

General Purpose Rotary Motor

- Fast response of electrostrictive polymer artificial muscle allows for use in motors
- Results with simple proof-of-concept device suggests that extremely high specific power and specific torque can be achieved
  - potential to exceed the best electromagnetic and piezoelectric motors
- Lightweight and powerful motor would find widespread usage in robotic and teleoperated devices
- many motor configurations are possible

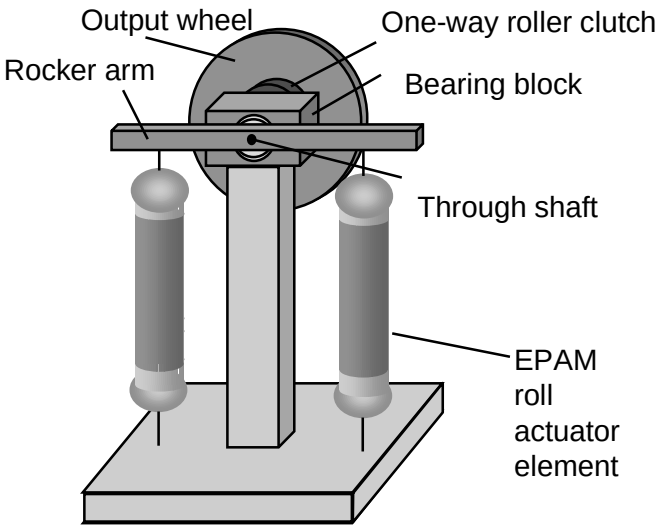

SIMPLE ROTARY MOTOR USING ELECTROSTRICTIVE POLYMER ARTIFICIAL MUSCLE ELEMENTS

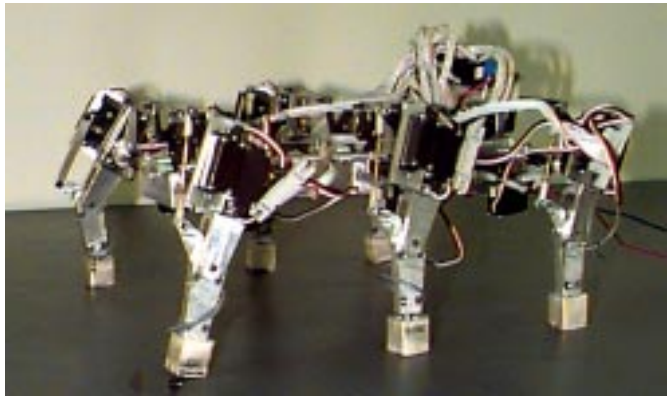

HEX, SRI'S SIX-LEGGED WALKER USES ELECTROMAGNETIC MOTORS THAT COULD BE REPLACED WITH LIGHTER AND MORE POWERFUL MUSCLE MOTORS

Direct Artificial Muscle Actuation for Robots

- Advantages
  - simple design with few moving parts
    - may be only option at extremely small size scales
  - can implement more sophisticated biomimetic control strategies that rely on the inherent compliance of the muscle
- Disadvantages/Research Challenges
  - motion or force may limit max payload
  - techniques for making reliable larger muscles are not yet mature (e.g. offset electrodes)
    - cascading and bundling smaller actuators is possible but unproven
  - efficient mechanical coupling of polymer to output is an issue

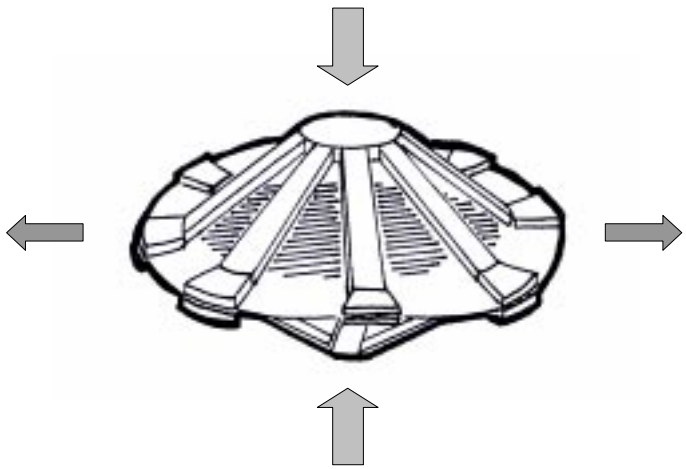

UNIQUE MUSCLE-LIKE ACTUATOR CONFIGURATION EFFCICIENTLY COUPLES THE POLYMER DEFORMATION TO THE OUTPUT

Control Advantages for EP Legs

- SRI work on six legged (conventional drives) indicates need for force sensing in optimal legged locomotion

- Can use EP actuators for sensing
  - capacitive or resistive (strain gauge-type)
  - programmable compliance
  - force sensing
  - can use actuators for sensing, or integrate separate EP actuators-sensors using monolithic fabrication

- Can integrate several degrees of freedom on a single substrate - e.g. for tailored compliance and actuation

- Inherent compliance of actuators
  - pre-reflexive response
  - enhanced energy output at resonance conditions (not possible with actuators which saturate)

Other Electrostrictive Polymer Research

- SRI is aware of a few other groups doing electrostrictive polymer research
  - Rutgers (Scheinbeim)
  - Wisconsin/Delaware (Klingenberg/Cooper)
  - Penn State (Zhang)
- These other research efforts are focusing mostly on investigation of the mechanism of electrostriction and its relation to the material structure
- Most of these efforts consider relatively more rigid polymers, such as polyurethane and PVDF, and have claimed a mechanism of electrostriction that is different from the coulombic forces that dominate with softer materials with highly compliant electrodes
- Some groups are beginning to try to develop practical actuators based on electrostriction of polymers with compliant electrodes
  - Risø National Laboratory, Denmark (Sommer-Larsen)
  - JPL (Bar-Cohen)

Summary

- Electrostrictive Polymers are a promising actuator technology
  - performance similar to natural muscle
  - low cost materials; standard fabrication techniques
  - efficient, lightweight; especially good for mobile applications
- Many potential applications
  - micro and macro sizes
  - good fit for robotic legs, wings, antennae, etc.
- Technical challenges
  - optimal actuator design to maximize energy output
  - fabrication and scaling up actuators
  - integration into robot power system